RoHS Compliant

REV	ECN No.	DATE	REMARK
A0	NEW	2024.5.19	NEW RELEASE

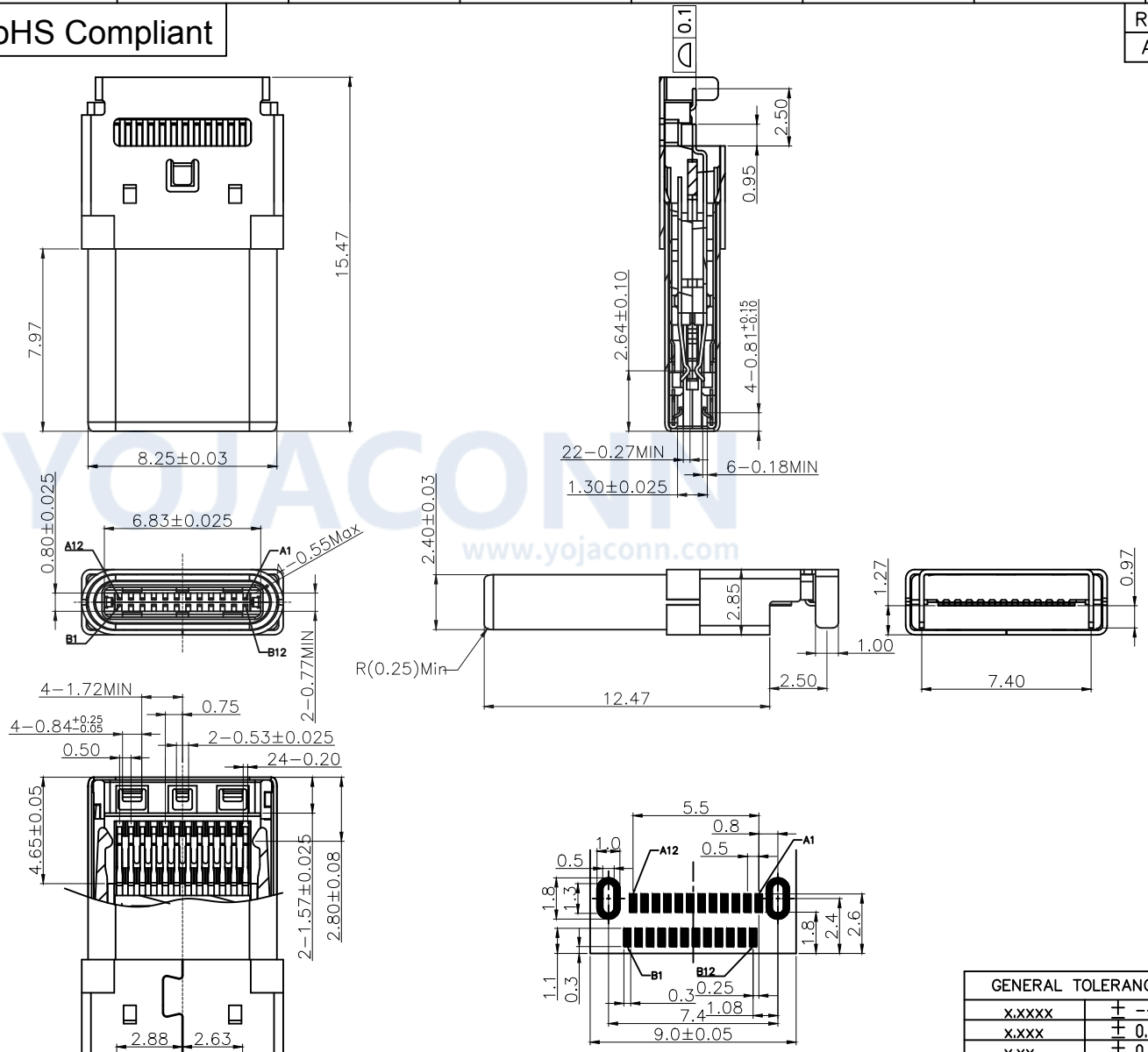

RECOMMENDED P.C.B. LAYOUT

TOLERANCE UNSPECIFIED ±0.05mm

NOTES:

1. MATERIAL:
   - 1.1 Housing : LCP UL94 V−0,Black
   - 1.2 Contact : Copper Alloy.3u" gold on contact area,Nickel underplating over all
   - 1.3 Shell:Stainless Steel,Bright Nickel Plating.
   - 1.4 Shield:Stainless Steel,Bright Nickel Plating.
   - 1.5 Emc Spring:Stainless Steel,natural
   - 1.6 Latch:Stainless Steel,natural
2. SPECIALITY:
   - 2.1 CURRENT: 5A For Pin(A4,A9,B4,B9); 1.25A For Others Pin. VOLTAGE: 20 V MAX
   - 2.2 CONTACT RESISTANCE: 40mΩ MAX.
   - 2.3 INSULATION RESISTANCE: 100mΩ MIN.
   - 2.4 WITHSTANDING VOLTAGE: 100V AC R.M.S.
   - 2.5 INSERTION: 0.5~2.0 kgf. EXTRACTION:0.6~2.0 kgf.
   - 2.6 DURABILITY: 10000 CYCLES.

USB TYPE−C PIN ASSIGNMENTS

PIN	SIGNAL NAME	PIN	SIGNAL NAME
A1	GND	B12	GND
A2	SSTXp1	B11	SSRXp1
A3	SSTXn1	B10	SSRXn1
A4	VBUS	B9	VBUS
A5	CC1	B8	SBU2
A6	DP1	B7	DN2
A7	DN1	B6	DP2
A8	SBU1	B5	CC2
A9	VBUS	B4	VBUS
A10	SSRXn2	B3	SSTXn2
A11	SSRXp2	B2	SSTXp2
A12	GND	B1	GND

GENERAL TOLERANCES	
x.xxxx	± ---
x.xxx	± 0.10
x.xx	± 0.25
x.x	± 0.30
ANGULAR	± --°

DRAWN BY	XGC	2024.5.30
CHECKED BY	ZKX	2024.5.30
APPROVED BY	LLQ	2024.5.19

深圳市跃佳电子有限公司
SHENZHEN YOJACONN ELECTRONICS CO.,LTD.

TITLE: TYPE−C公头 24P 沉板1.27 两脚插 长15.47HA

UNIT	MM	PART NO.	CM24S127−2DS1547HA−S3N33
SIZE	A4	DWG NO.	CM24−001
SCALE		PROJECTION	
		SHEET	1 OF 3

YOJACONN www.yojaconn.com

RoHS Compliant

REV	ECN No.	DATE	REMARK
A0	NEW	2024.5.19	NEW RELEASE

出料方向
PULL OUT DIRECTEON

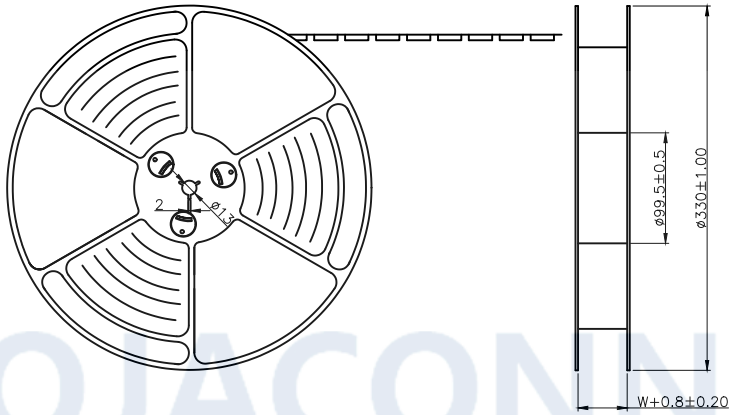

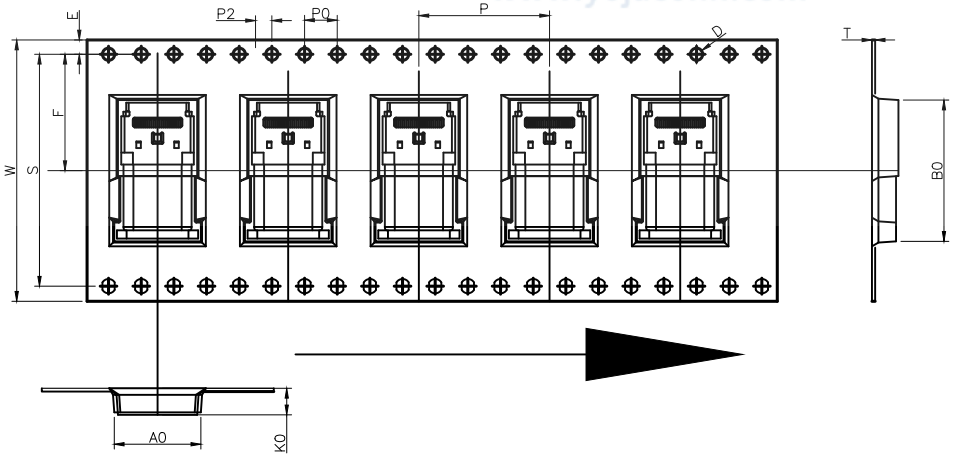

NOTES

1. 帶子引導長度
LEAD TAPE LENGTH
出料方向
PULL OUT DIRECTEON

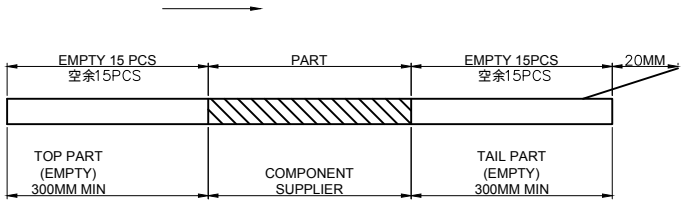

2. 出貨'運輸過程中一定注意：
THIS REQUIREMENT SHOULD BE APPLIED AT SHIPMENT :
卷帶在運輸過程中不能散開
PEELING OFF SHOULD NOT BE ALLOWED DURING TRANSPORTATION

YOJACONN
www.yojaconn.com

ITEM	W	A_0	S	B_0	B_1	K_0	P	F	E	D	P_0	P_2	T
DIM	$32.0^{+0.30}_{-0.30}$	$10.50^{+0.10}_{-0.10}$	$28.00^{+0.10}_{-0.10}$	$16.90^{+0.10}_{-0.10}$	$---^{+0.10}_{-0.10}$	$3.40^{+0.10}_{-0.10}$	$16.0^{+0.10}_{-0.10}$	$14.20^{+0.15}_{-0.15}$	$1.75^{+0.10}_{-0.10}$	$1.50^{+0.10}_{-0.00}$	$4.00^{+0.10}_{-0.10}$	$2.00^{+0.10}_{-0.10}$	$0.30^{+0.05}_{-0.05}$
ALTERNATE													

GENERAL TOLERANCES	
x.xxxx	± ---
x.xxx	± 0.10
x.xx	± 0.25
x.x	± 0.30
ANGULAR	± --°

深圳市跃佳电子有限公司
SHENZHEN YOJACONN ELECTRONICS CO.,LTD.

TITLE	TYPE-C公头24P沉板1.27两脚插 长15.47HA		
DRAWN BY	XGC 2024.5.30	UNIT	MM
CHECKED BY	ZKX 2024.5.30	SIZE	A4
APPROVED BY	LLQ 2024.5.19	SCALE	
PART NO.	CM24S127-2DS1547HA-S3N33		
DWG NO.	CM24-001		
PROJECTION		SHEET	2 OF 3

RoHS Compliant

REV	ECN No.	DATE	REMARK
A0	NEW	2024.5.19	NEW RELEASE

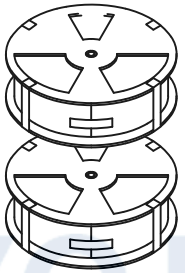

包裝盤 tape reel

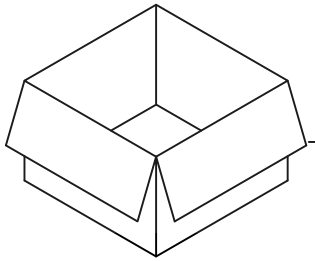

紙箱 carton

Location of label sticking (label 標簽黏貼處 (朝捲裝包材的小定位孔一側) at small positioning hole of the carrier tape side).

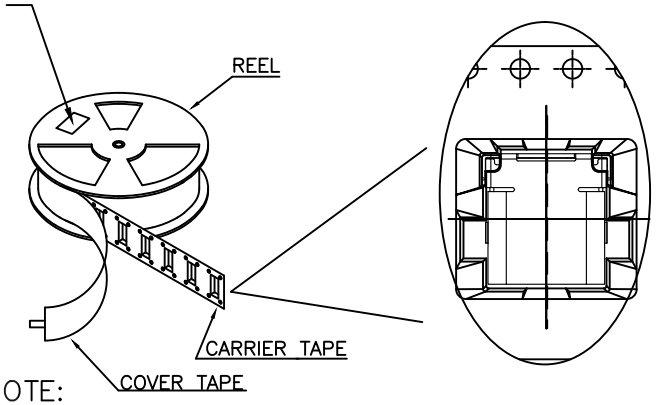

NOTE:

1. 每捲包裝數量及每箱裝箱數量如左下表格.
Packing q'ty of each reel & carton as below table shown.
2. 以上膠帶覆蓋下包裝帶經包裝機熱熔包裝
Use cover tape to cover and hot melt machine to seal up.
3. 將裝滿產品的卷盤放入紙箱并以膠帶封口
Put reels in the carton and use adhesive tape to seal up.

YOJACONN
www.yojaconn.com

產品料號 (PRODUCT No.)	包裝容量 (PACKING CAPACITY)			重量 WEIGHT (Kg)		
	PCS/REEL	REELS/CARTON	PCS/CARTON	N.W./PCS	N.W./BOX	G.W./BOX
	1000	8	8000			

GENERAL TOLERANCES	
x.xxxx	± ---
x.xxx	± 0.10
x.xx	± 0.25
x.x	± 0.30
ANGULAR	± --°

深圳市跃佳电子有限公司
SHENZHEN YOJACONN ELECTRONICS CO.,LTD.

TITLE: TYPE-C公头 24P 沉板1.27 两脚插 长15.47HA

DRAWN BY	XGC 2024.5.30	UNIT MM	PART NO. CM24S127-2DS1547HA-S3N33
CHECKED BY	ZKX 2024.5.30	SIZE A4	DWG NO. CM24-001
APPROVED BY	LLQ 2024.5.19	SCALE	PROJECTION / SHEET 3 OF 3